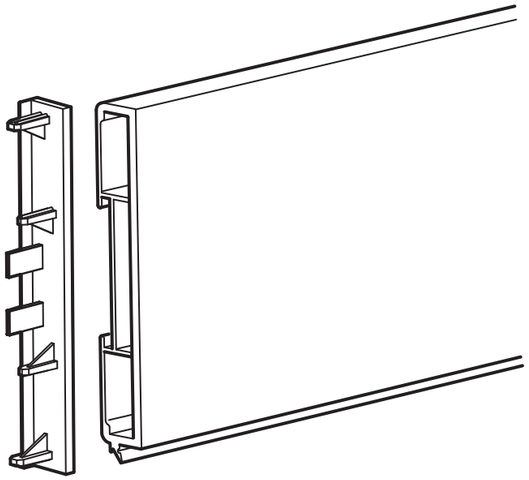

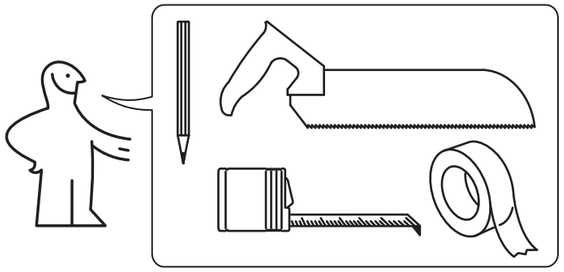

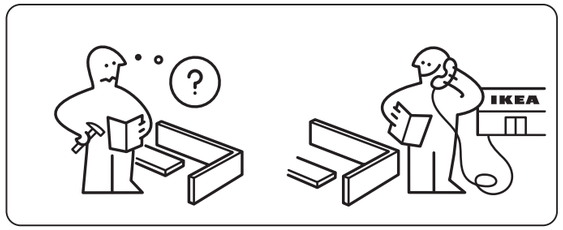


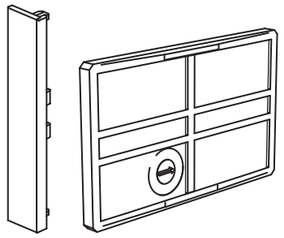

2x 1x

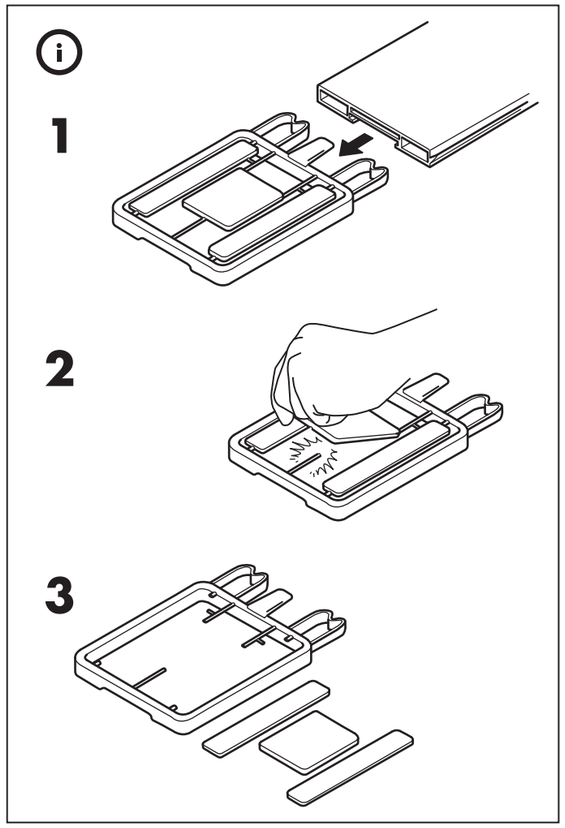


1

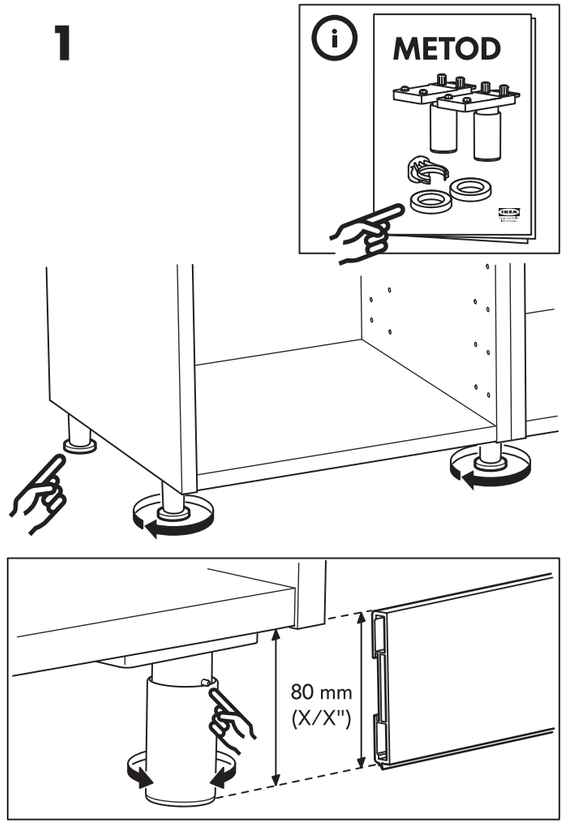


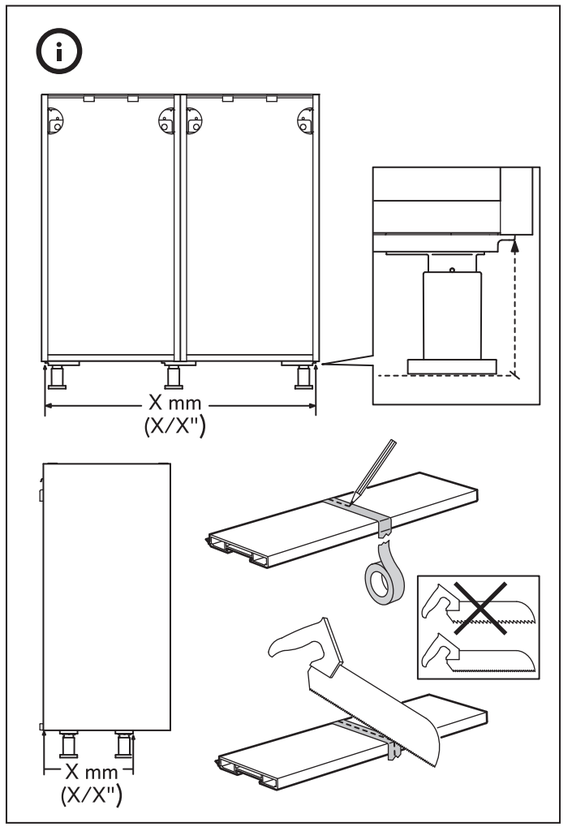


2

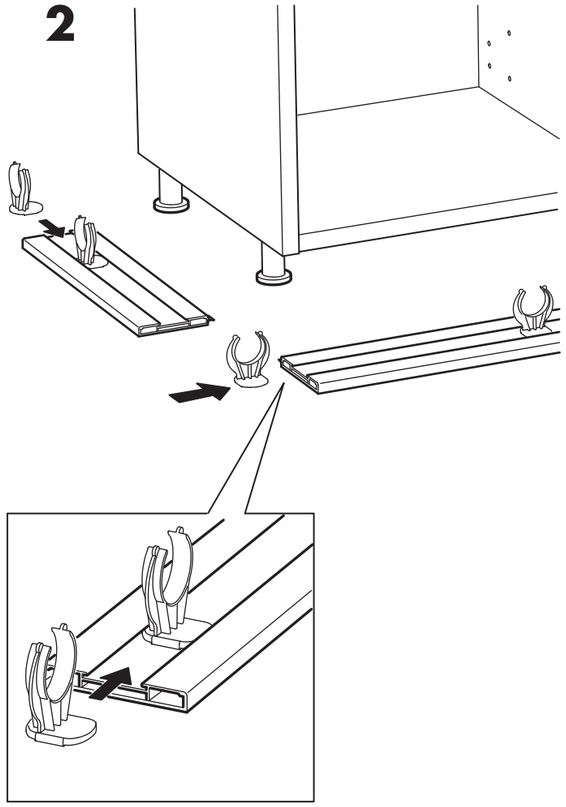

3

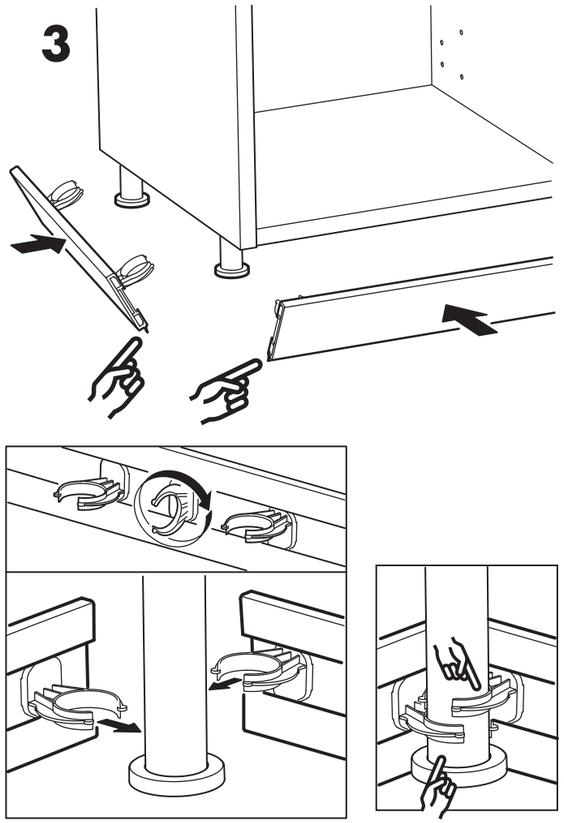

4

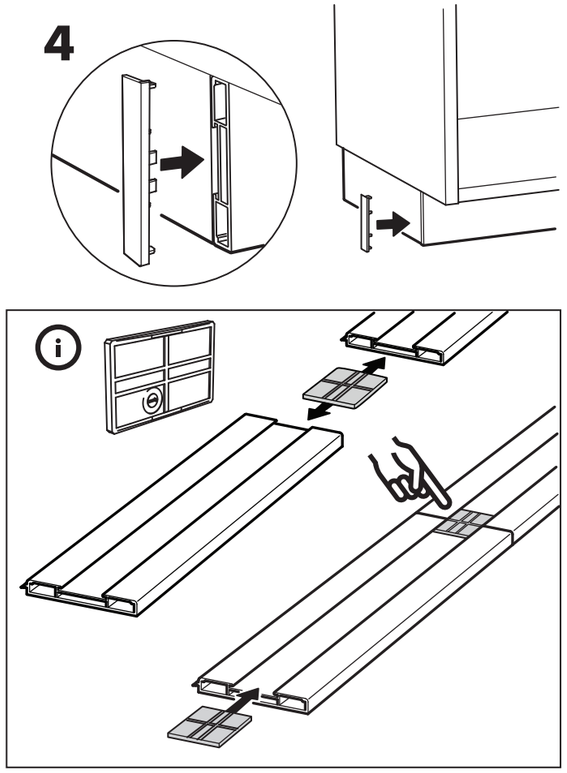

Design and Quality
IKEA of Sweden

© Inter IKEA Systems B.V. 2018

2019-10-02
AA-2194901-1